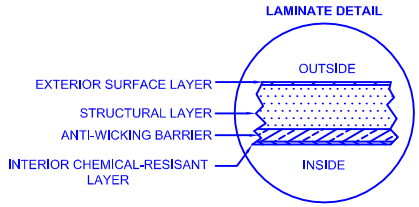


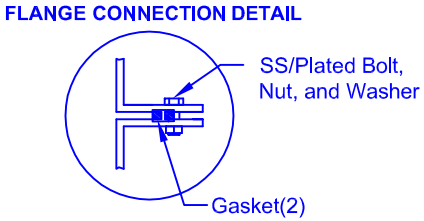


| MATERIALS LIST | | | | | |
|---|---|---|---|---|---|
| ITEM | QTY | DESCRIPTION | ITEM | QTY | DESCRIPTION |
| A | 1 | C-DOME-8-1750S | B | 1 | C-DOME-8-1750S-30COL |
| C | 1 | C-CYL-1500-S-W/BELL | D | 1 | C-CYL-3000-S-W/BELL |
| E | 1 | 4" PVC-DWV ELBOW-INLET | F | 2 | STEEL LIFTING LUG |
| G | 1 | C-LID-30IN-STD-W/8" POLY NONVENTED LID | | | |
| * TANK COMES FULLY ASSEMBLED FROM FACTORY * | | | | | |

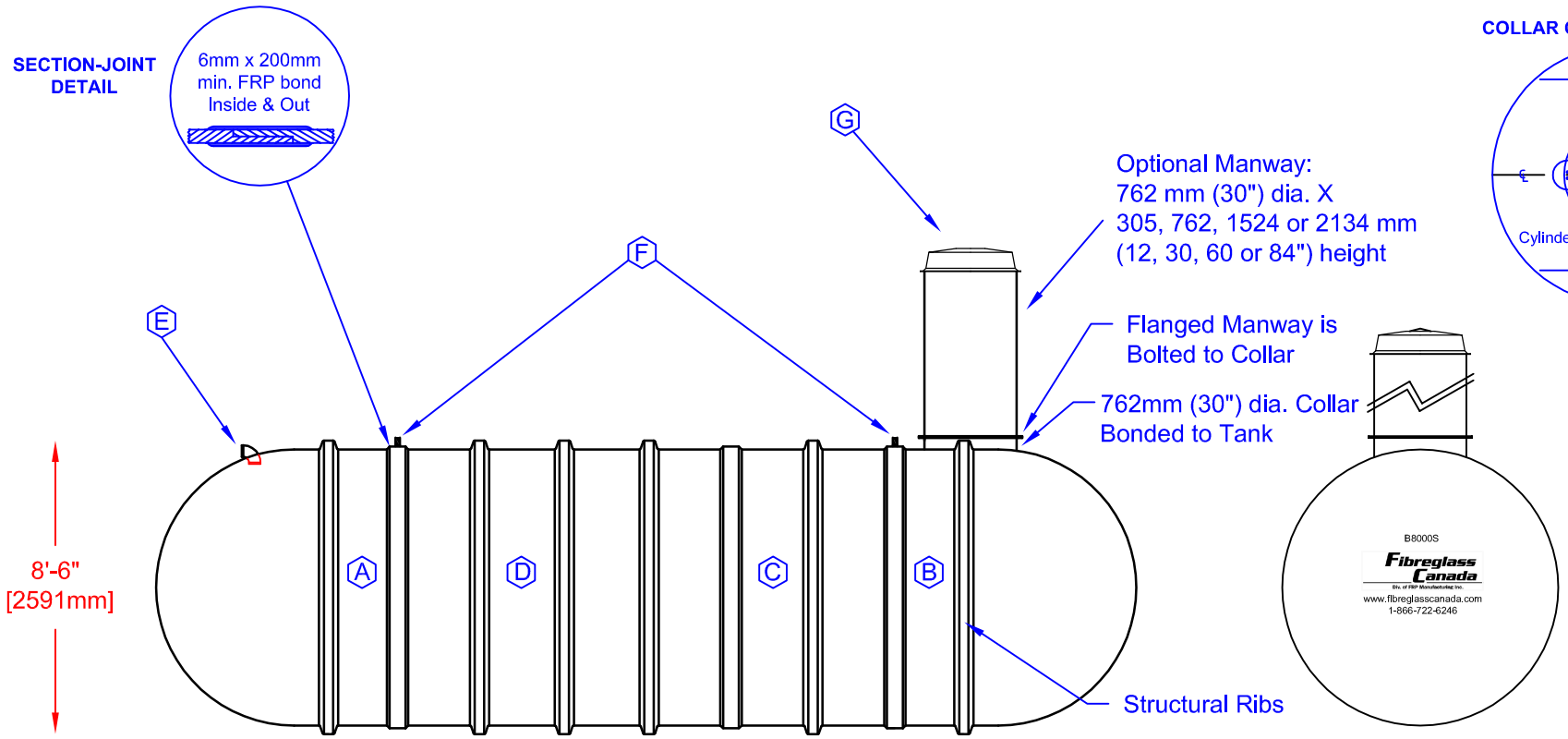


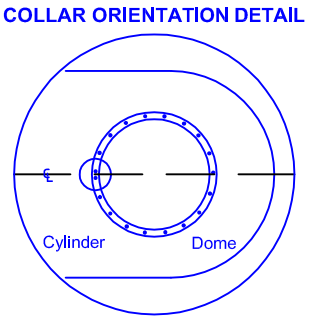


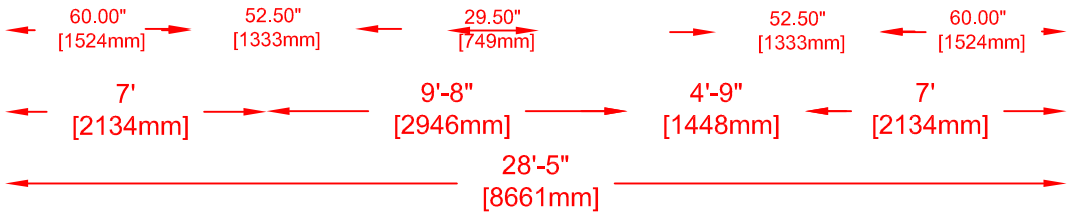


- Various fittings available including bulkhead fittings, pipe, flanged fittings, vents, etc. at extra cost.
- Accessories available such as pump stand, 2nd manway, ladder, lock bar for lid, etc. at extra cost.

| Fibreglass Canada Div. of FRP Manufacturing Inc. | B-8000(S) FIBREGLASS SEWAGE HOLDING TANK | | DATE: 05-15-2007 | DWG SCALE: |
|---|---|---|---|---|
| | Overall Length: | Approx. 8,661mm (28' 5") | BY: MARK SOLLID | REV: 0 |
| | Overall Weight: | Approx. 1,318 kg (2,900 lbs) | DATE: | |
| | Overall Capacity: | Approx. 36,368L (8,000 Imp Gal, 9,600 US Gal) | APPROVAL: | |